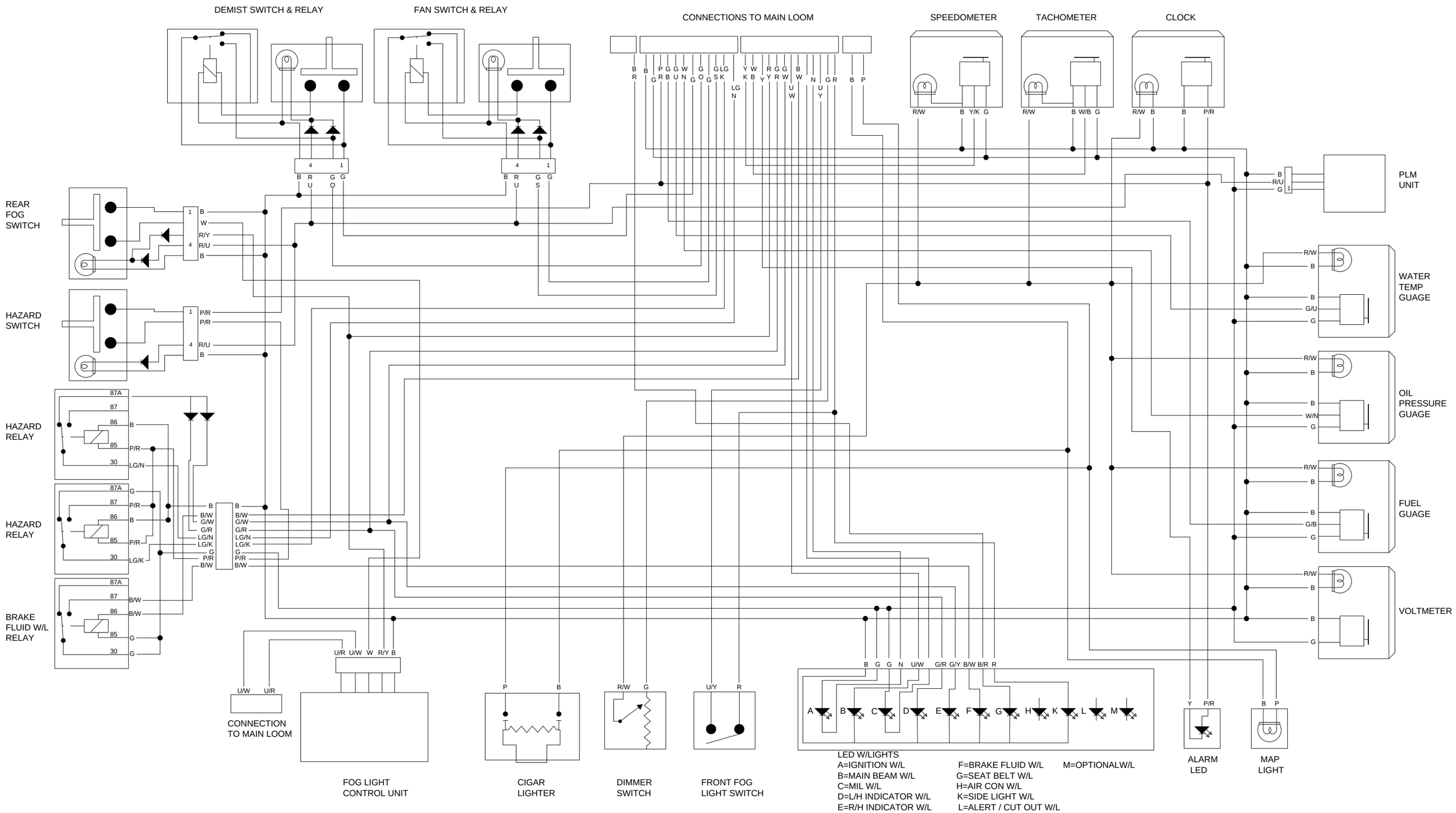
DEMIST SWITCH & RELAY
FAN SWITCH & RELAY
CONNECTIONS TO MAIN LOOM
SPEEDOMETER
TACHOMETER
CLOCK
PLM UNIT
REAR FOG SWITCH
HAZARD SWITCH
HAZARD RELAY
HAZARD RELAY
BRAKE FLUID W/L RELAY
WATER TEMP GUAGE
OIL PRESSURE GUAGE
FUEL GUAGE
VOLTMETER
CONNECTION TO MAIN LOOM
FOG LIGHT CONTROL UNIT
CIGAR LIGHTER
DIMMER SWITCH
FRONT FOG LIGHT SWITCH
ALARM LED
MAP LIGHT
LED W/LIGHTS
A=IGNITION W/L
B=MAIN BEAM W/L
C=MIL W/L
D=L/H INDICATOR W/L
E=R/H INDICATOR W/L
F=BRAKE FLUID W/L
G=SEAT BELT W/L
H=AIR CON W/L
K=SIDE LIGHT W/L
L=ALERT / CUT OUT W/L
M=OPTIONALW/L