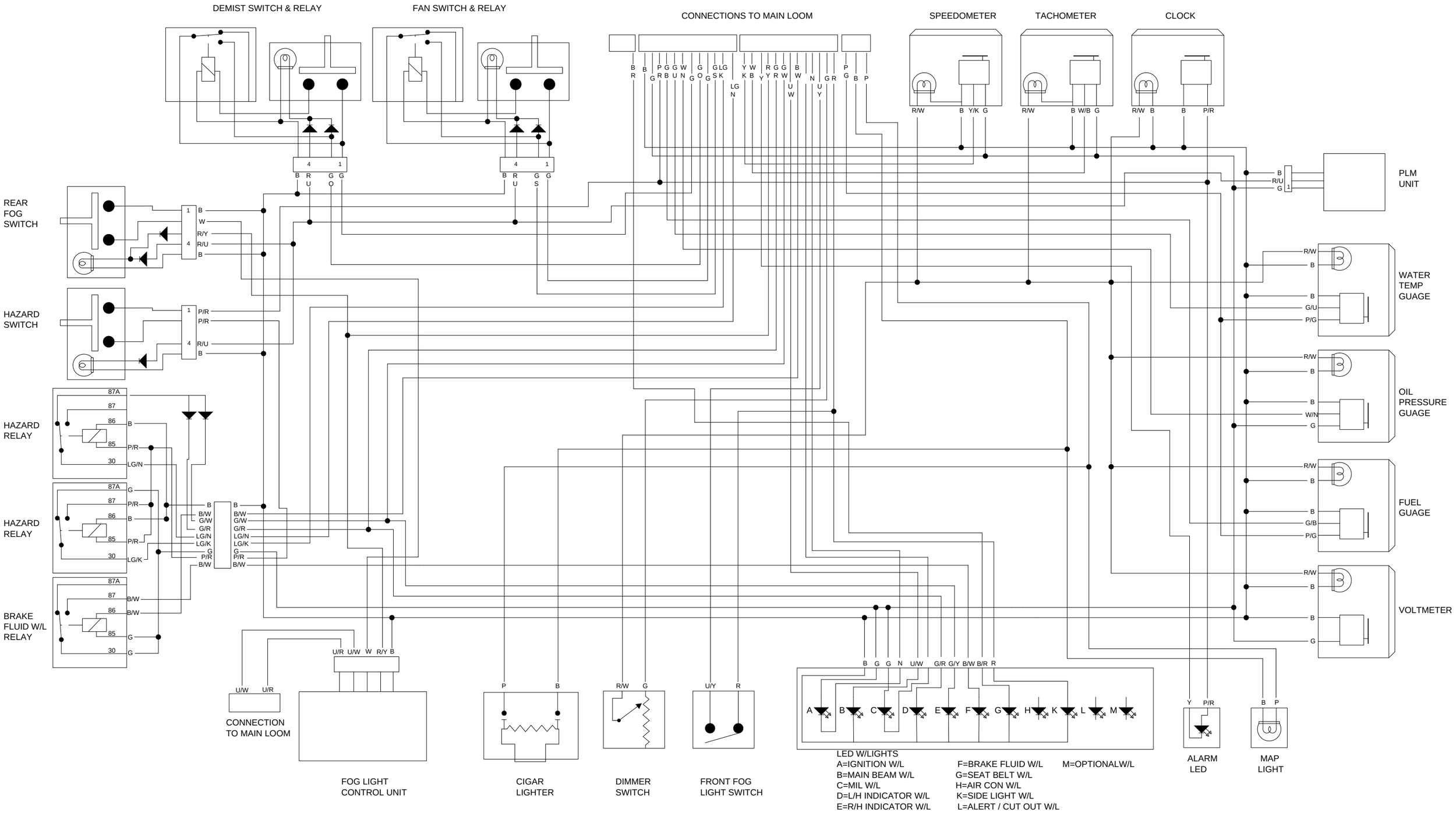
DEMIST SWITCH & RELAY
FAN SWITCH & RELAY
CONNECTIONS TO MAIN LOOM
SPEEDOMETER
TACHOMETER
CLOCK
PLM UNIT
REAR FOG SWITCH
HAZARD SWITCH
HAZARD RELAY
HAZARD RELAY
BRAKE FLUID W/L RELAY
WATER TEMP GUAGE
OIL PRESSURE GUAGE
FUEL GUAGE
VOLTMETER
CONNECTION TO MAIN LOOM
FOG LIGHT CONTROL UNIT
CIGAR LIGHTER
DIMMER SWITCH
FRONT FOG LIGHT SWITCH
LED W/LIGHTS
A=IGNITION W/L
B=MAIN BEAM W/L
C=MIL W/L
D=L/H INDICATOR W/L
E=R/H INDICATOR W/L
F=BRAKE FLUID W/L
G=SEAT BELT W/L
H=AIR CON W/L
K=SIDE LIGHT W/L
L=ALERT / CUT OUT W/L
M=OPTIONALW/L
ALARM LED
MAP LIGHT